AIR NAILER MODEL 8016J-DC407 EXPLODED VIEW DRAWING

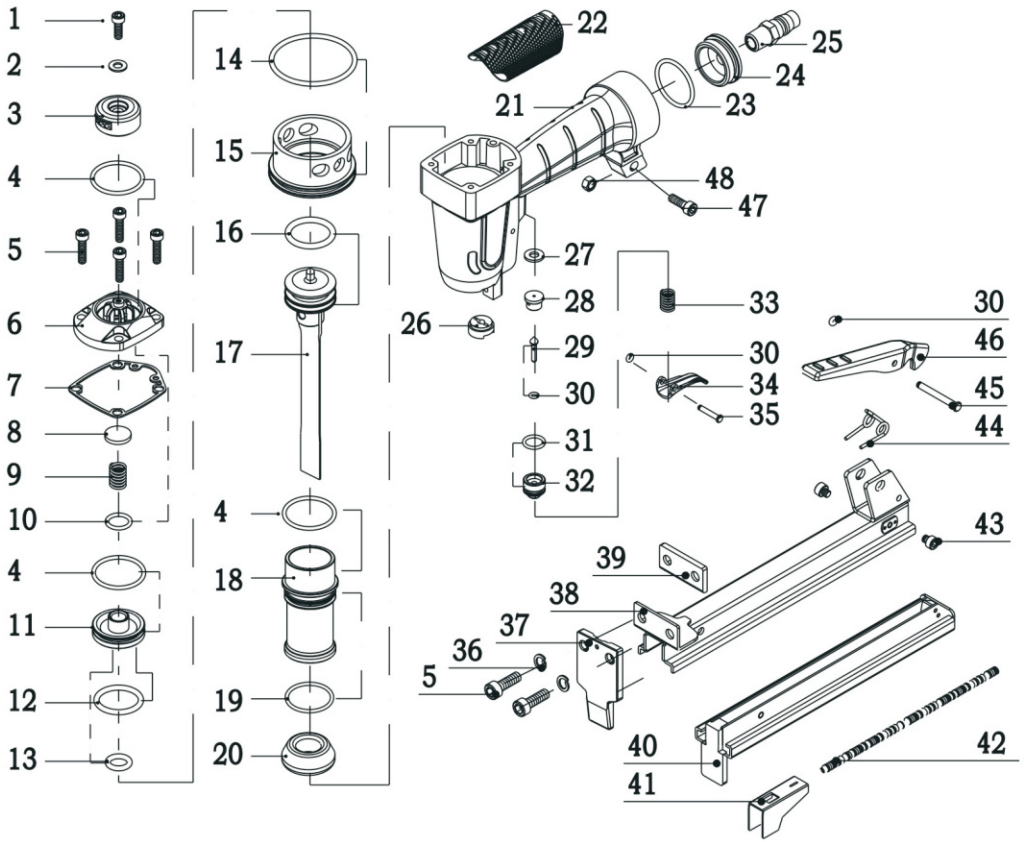

AIR NAILER MODEL 8016J-DC407 PARTS LIST

No.	Description	Qty
1	Hex Bolt M5X8	1
2	Washer 5	1
3	Exhasut Cover	1
4	O-Ring 26.2X2.5	3
5	Hex Bolt M5X20	6
6	Cylinder Cap	1
7	Cylinder Cap Gasket	1
8	Shim	1
9	Compression Spring	1
10	O-Ring 11.7X2.5	1
11	Head Valve Piston	1
12	O-Ring 21.3X3	1
13	O-Ring 10X3.5	1
14	O-Ring 31.3X2.5	1
15	Support Collar	1
16	O-Ring 17.3X3	1
17	Driver	1
18	Cylinder	1
19	O-Ring 24.5X2	1
20	Bumper	1
21	Body	1
22	Rubber Grip	1
23	O-Ring 34X3.5	1
24	End Cap	1
25	Ari Plug	1
26	Nozzle	1
27	Seal (12.5-7-1.8)	1
28	Trigger Valve Head	1
29	Trigger Valve Stem	1
30	O-Ring 1.2X1.9	3

No.	Description	Qty
31	O-Ring 11.2X1.9	1
32	Trigger Valve Guide	1
33	Compression Spring	1
34	Trigger Body	1
35	Trigger Pin 3X14.8	1
36	Washer 5	2
37	Driver Guide	1
38	Fixed Magazine	1
39	Spacer	1
40	Mobile Magazine	1
41	Nail Pusher	1
42	Compression Spring	1
43	Hex Bolt M4X3	2
44	Torsion Spring	1
45	Step Pin 3X17.2	1
46	Magazine Click Latch	1
47	Hex Bolt M5X22	1
48	Screw Nut M5	1