598036
PARTS BREAKDOWN

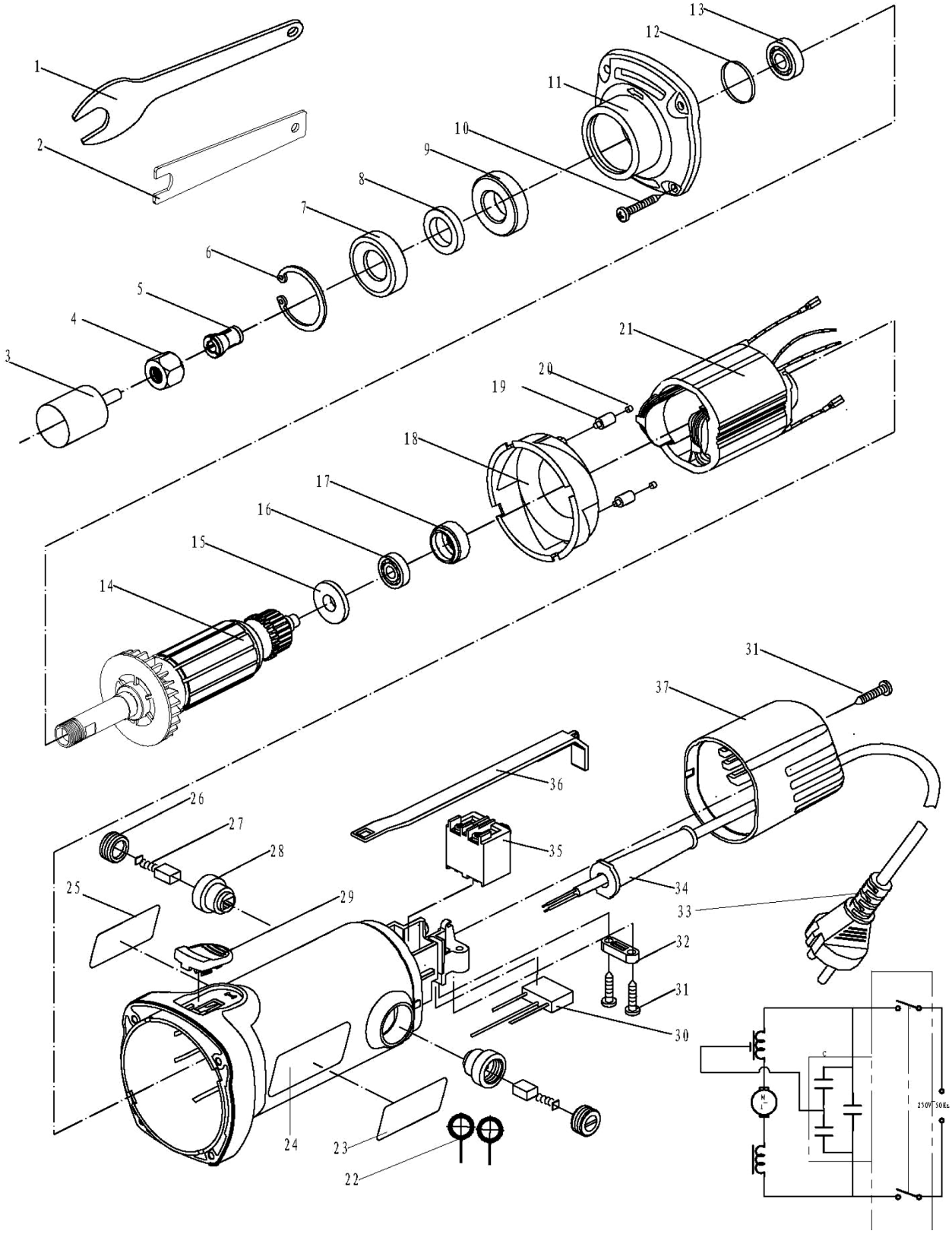

Pos	Part Number	Description	Quantity
1	GB/T4388-199	Wrench 17	1
2	GB/T4388-199	Wrench 12	1
3		Grinding head 25	1
4	505.502.012	Collet Nut	1
5	505.314.002	Elastic Collet	1
6	GB/T893.1-19	Circlip 35	1
7	505.504.004	Plastic Washer	1
8	505.311.014	Dust Proof Felt Washer	1
9	505.504.001	Washer	1
10	GB/T845-1985	Tapping Screw ST4.2x19	4
11	505.301.002	Gear Housing	1
12	TL311.005.24	O-Ring 27.6x1.8	1
13	GB/T276-1994	Ball Bearing 61902-2Z	1
14	505.102.100	Armature	1
15	TL311.002.6	Dust Proof Ring	1
16	GB/T276-1994	Ball Bearing 607-2Z	1
17	TL311.001.13	Bearing Sleeve	1
18	439.301.006	Fan Guide	1
19	451.311.026	Additional Column (11.5mm)	2
20	451.311.016	Rubber Arresting Screw	2
21	505.101.100	Stator	1
22	TL403.103.1	Brush Holder Assemble set	2
23	505.000.005	Name Plate	1
24	451.301.001	Housing	1
25	505.000.004	Rating Plate	1
26	TL403.011.1	Brush Holder Cover	2
27	TL403.100.3	Carbon Brush Assembly	2
28	TL403.005.12	Brush Holder	2
29	TL402.001.1	Switch Pushing Block	1
30	TL405.001.3	Capacitor (0.22uF)	1
31	GB/T845-1985	Tapping Screw ST4.2x13	3
32	TL401.003.4	Cable Clamp	1
33		Cable & Plug 2x0.75mm^2	1
34	TL401.002.2	Cable Armor	1
35	TL402.101.8	Switch	1
36	451.402.002	Switch Lever	1
37	451.301.005	Back Cover	1